⚠ The component identified by the mark of ⚠ in the schematic are important X-Radiation and Safety Parts. If replacement is required, replace only with the same type and rating originally used.

⚠ The component identified by the mark of ⚠ in the schematic are important safety parts. If replacement is required, refer to service manual to re-adjust and/or re-check the B+ and High Voltage to reach the specified value.

NOTE : 1. Resistor values are in ohm, k=1000 ohm, M=1000000 ohm.
2. All resistors are 1/8 watt, 5% except where otherwise indicated.
3. ⊥ ⏚ ⏚ Represents PCB common ground.

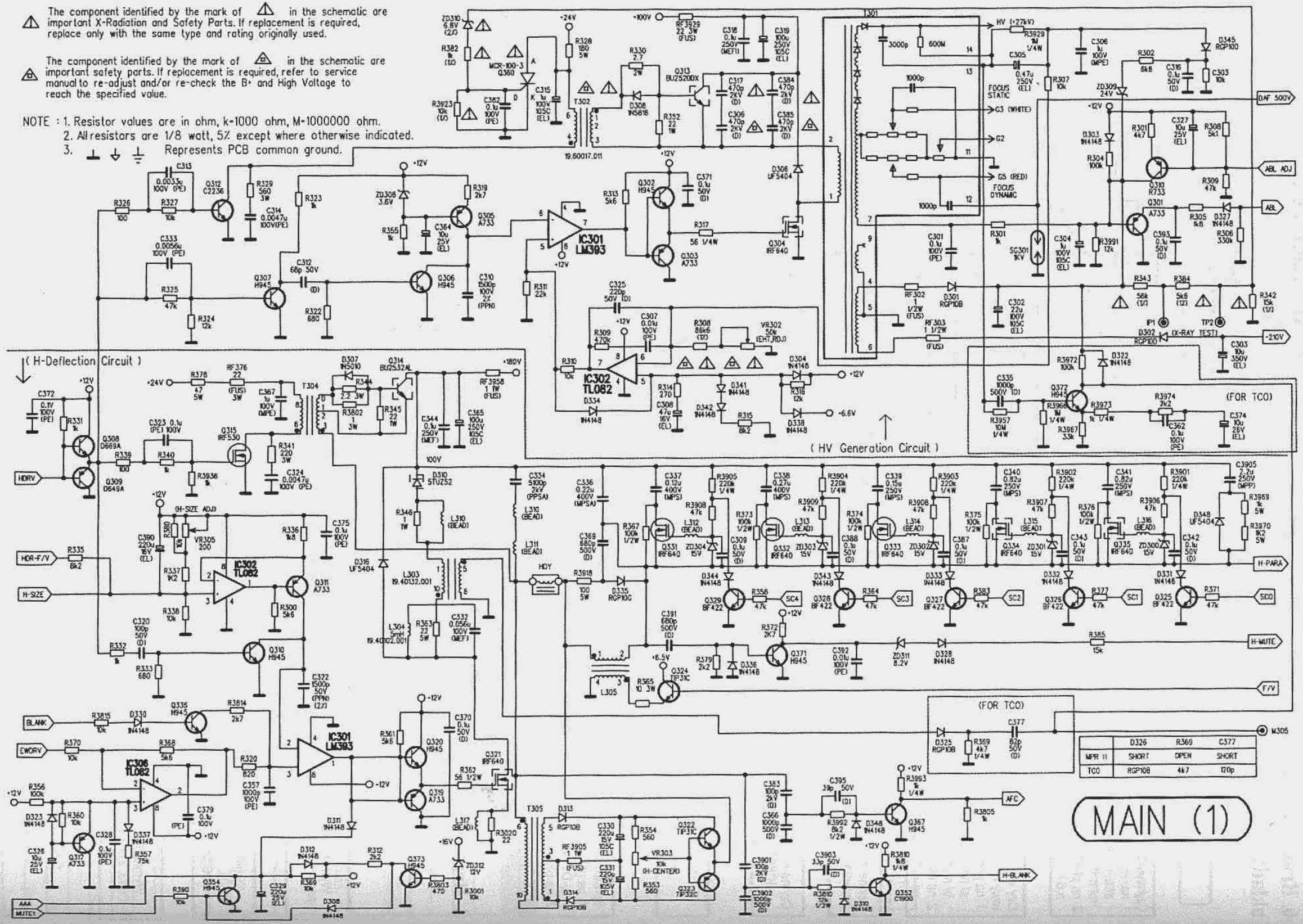

	D326	R369	C377
MPR II	SHORT	OPEN	SHORT
TCO	RGP108	4k7	120p

MAIN (1)

NOTE : 1. Resistor values are in ohm, k=1000 ohm, M=1000000 ohm.
2. All resistors are 1/8 watt, 5% except where otherwise indicated.
3. ⏚ ⏚ ⏚ Represents PCB common ground.

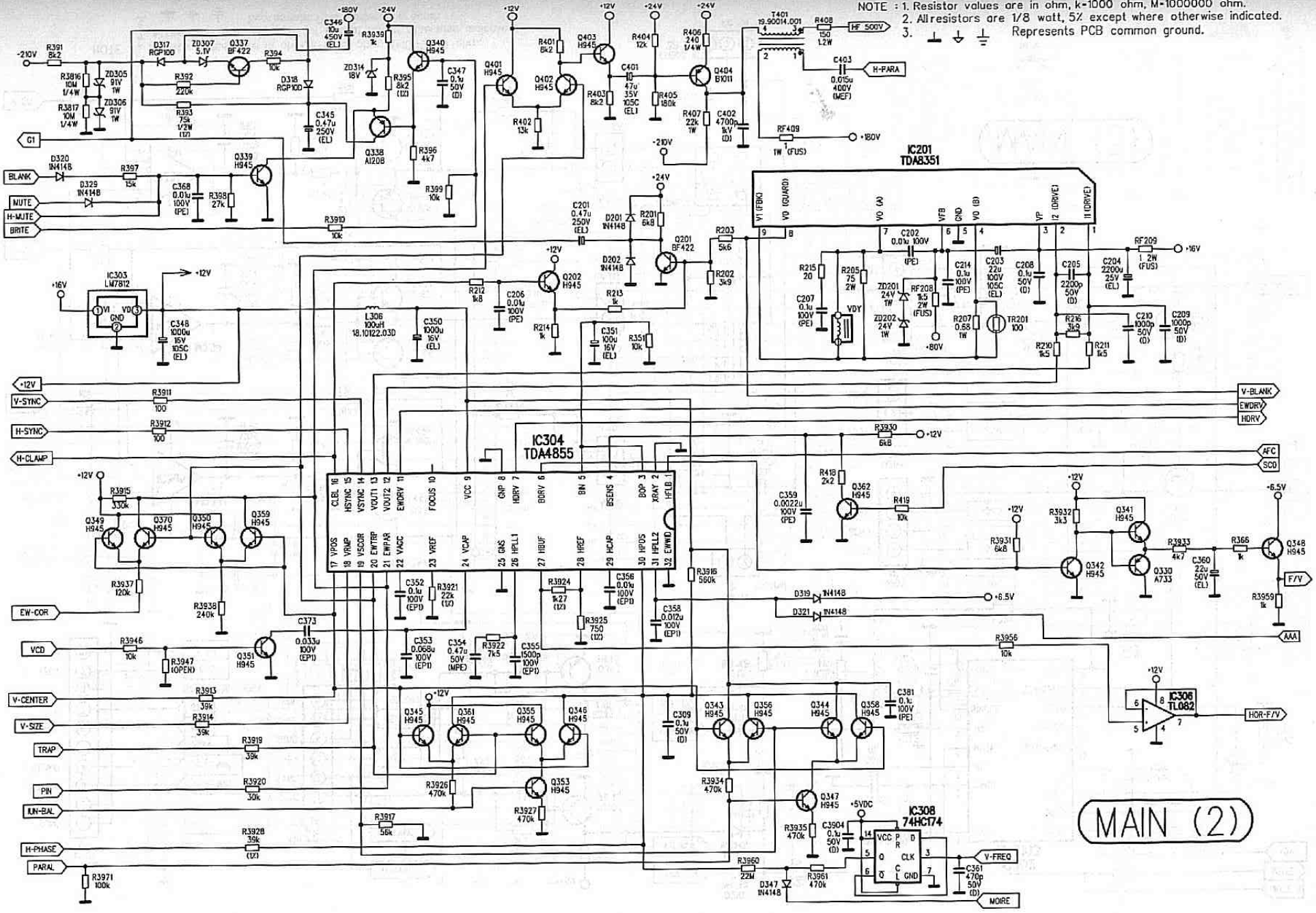

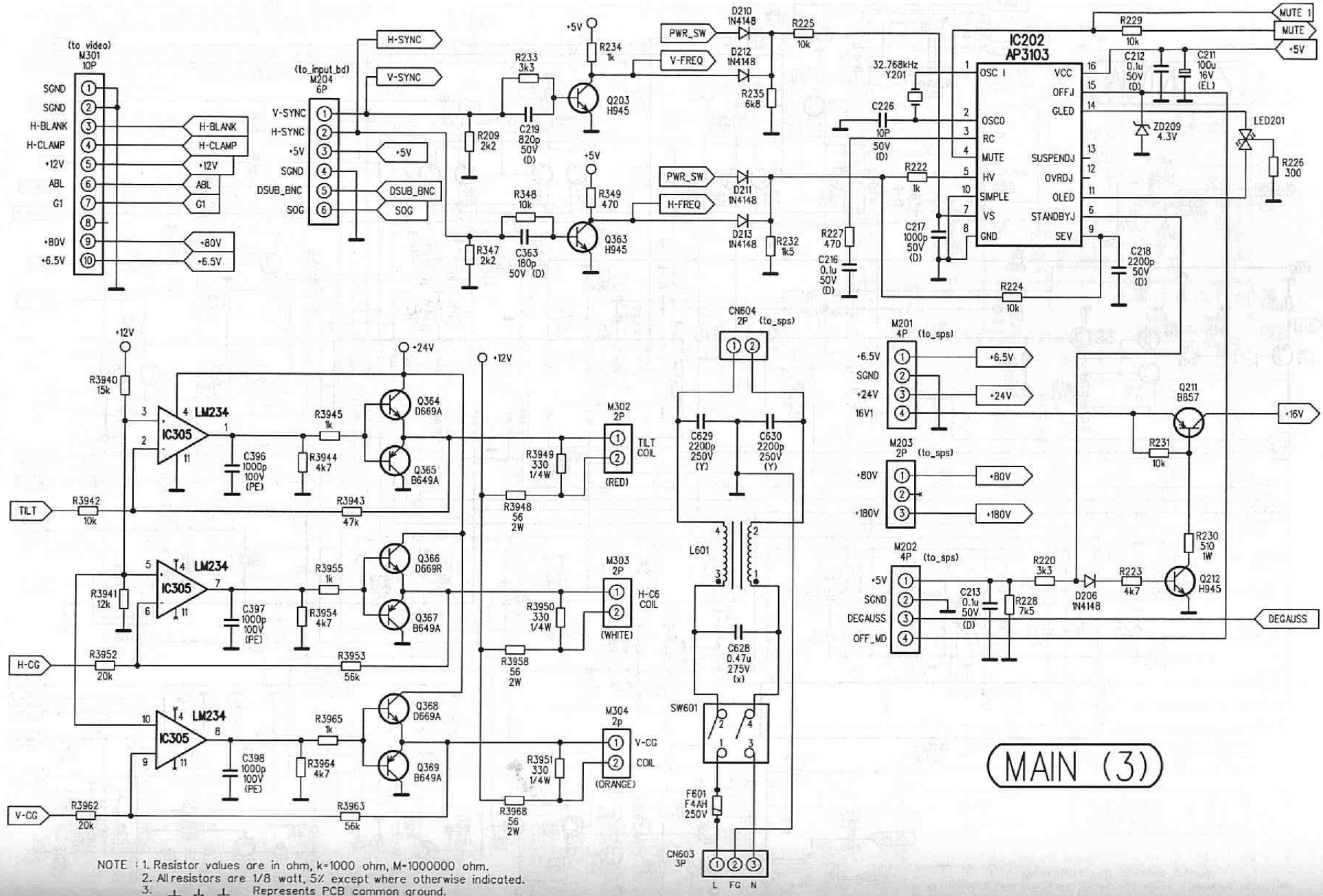

NOTE : 1. Resistor values are in ohm, k=1000 ohm, M=1000000 ohm.
2. All resistors are 1/8 watt, 5% except where otherwise indicated.
3. ⊥ ⏚ ⏚ Represents PCB common ground.

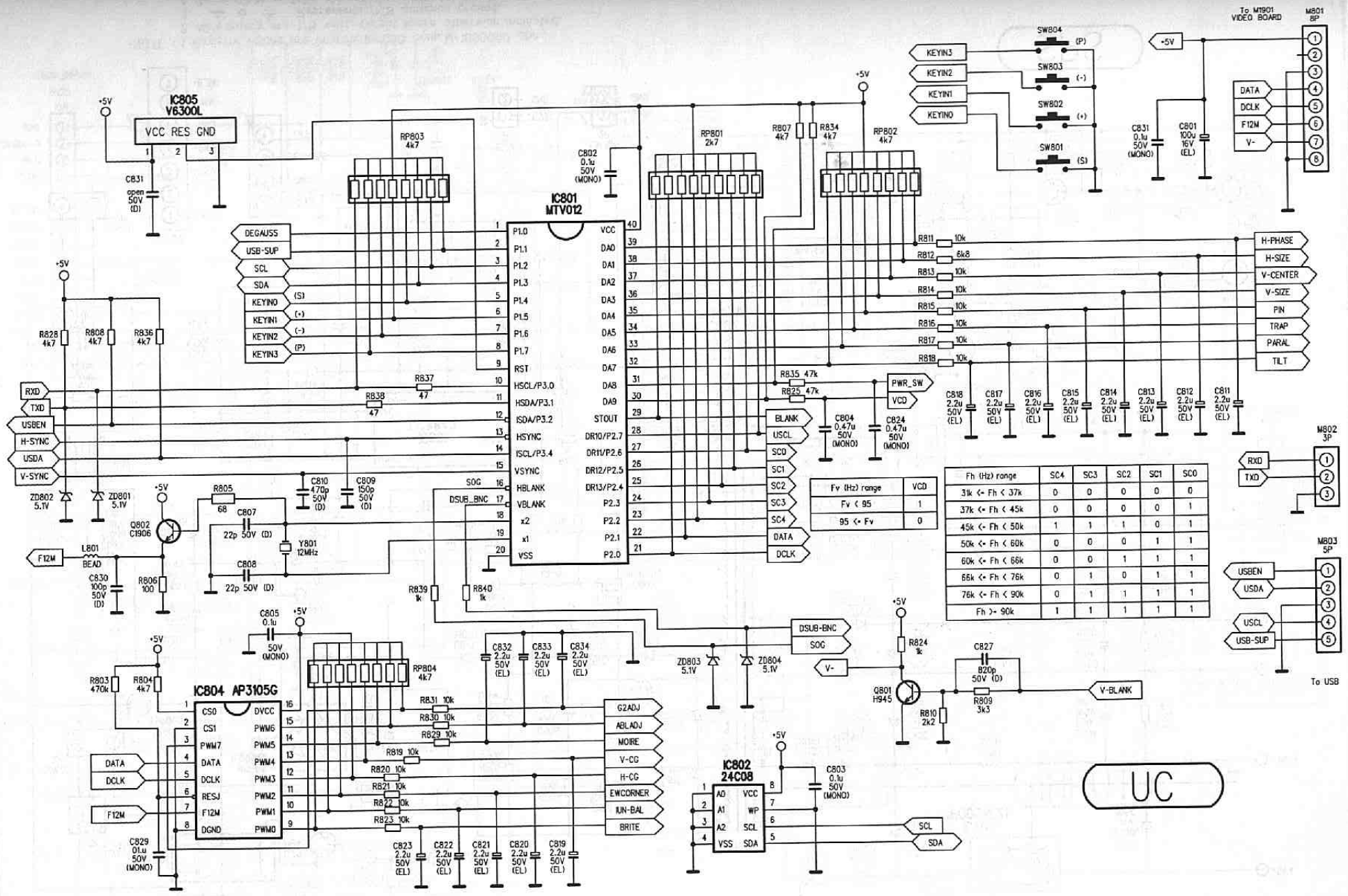

Fv (Hz) range	VCD
Fv < 95	1
95 <= Fv	0

Fh (Hz) range	SC4	SC3	SC2	SC1	SC0
31k <= Fh < 37k	0	0	0	0	0
37k <= Fh < 45k	0	0	0	0	1
45k <= Fh < 50k	1	1	1	0	1
50k <= Fh < 60k	0	0	0	1	1
60k <= Fh < 66k	0	0	1	1	1
66k <= Fh < 76k	0	1	0	1	1
76k <= Fh < 90k	0	1	1	1	1
Fh >= 90k	1	1	1	1	1

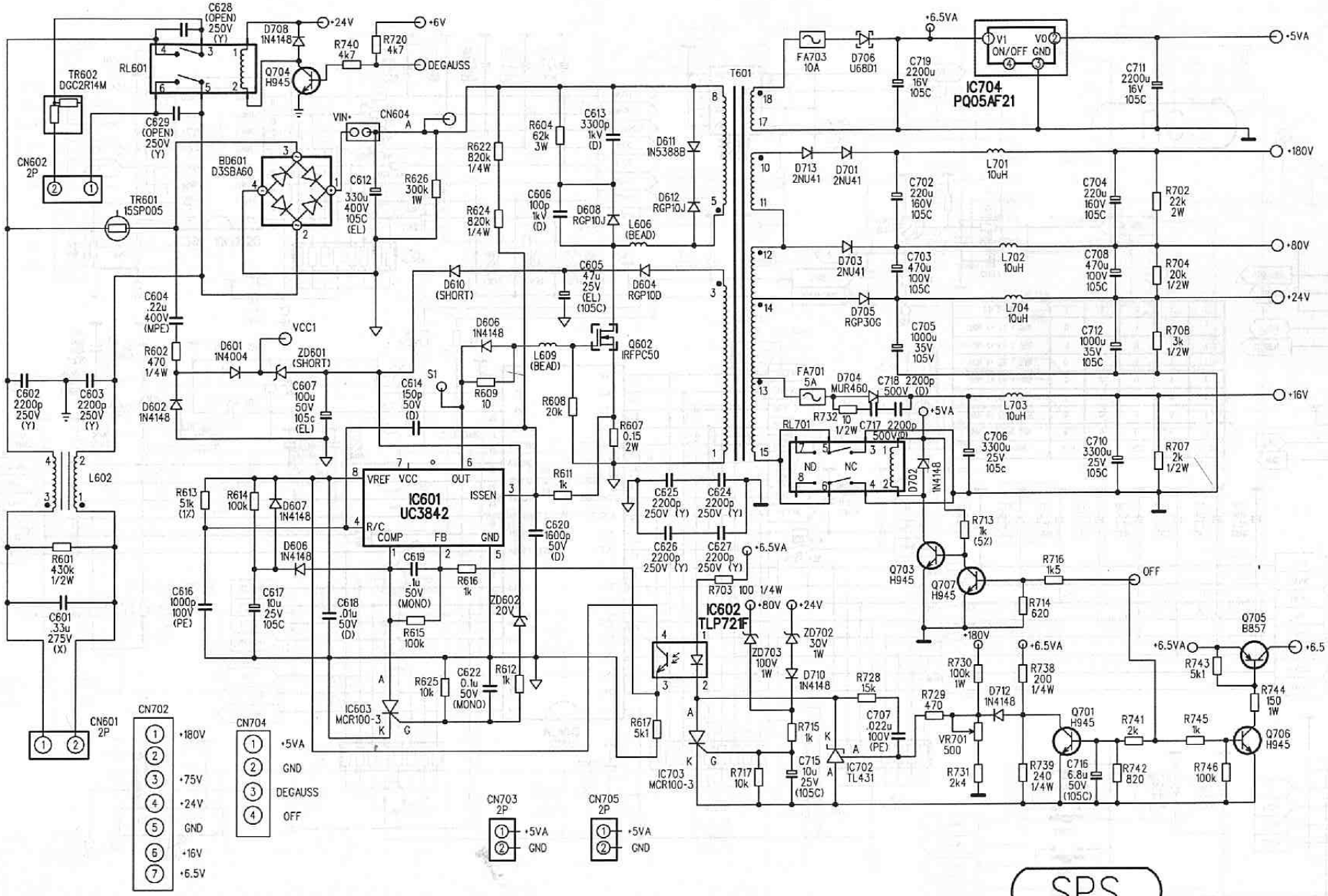

NOTE : 1. Resistor values are in ohm, k=1000 ohm, M=1000000 ohm.
2. All resistors are 1/8 watt, except where otherwise indicated.
3. ⊥ ⏚ ⏚ Represents PCB common ground.
4. Zener Diode is 1/2w except where otherwise indicated.

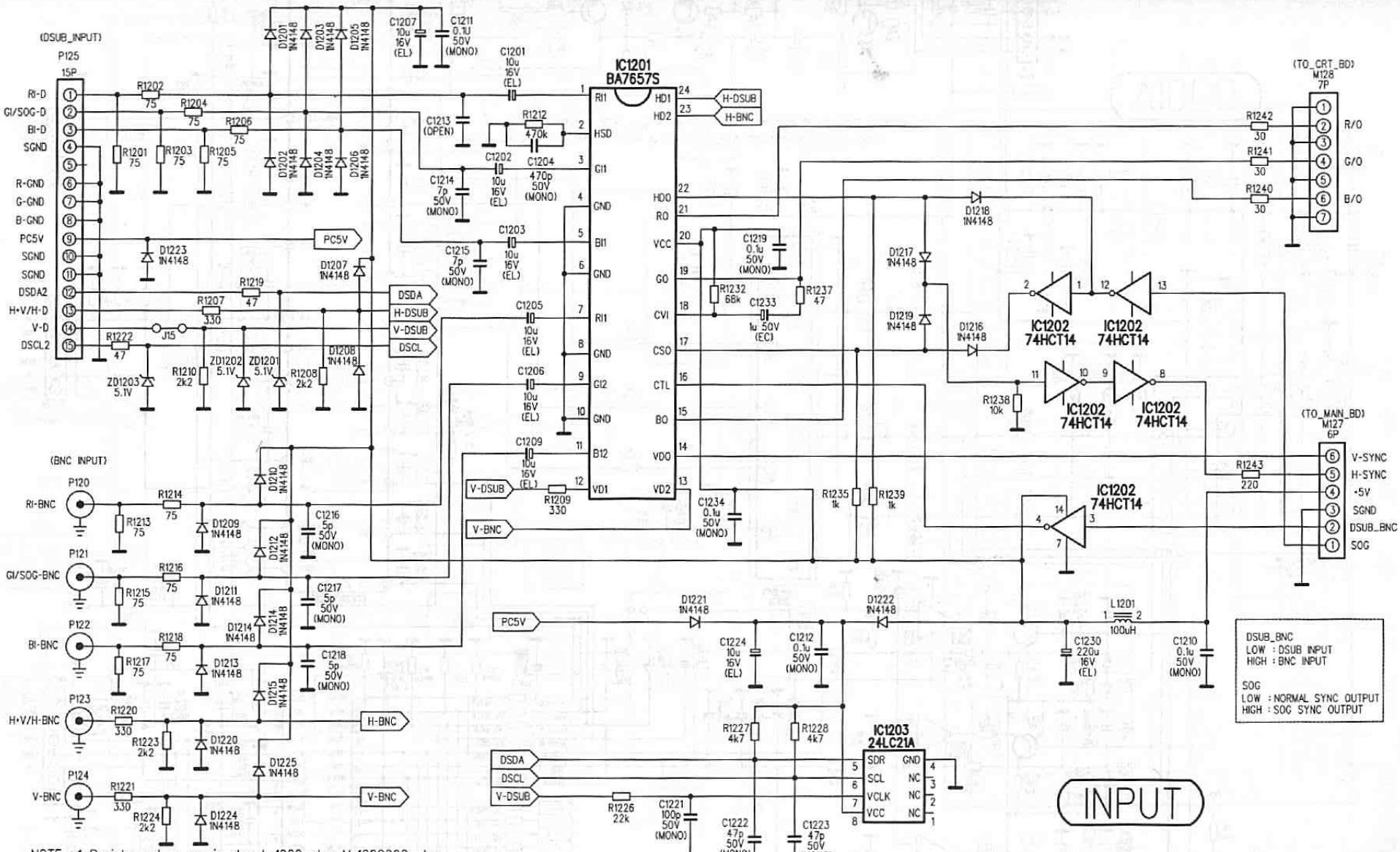

NOTE : 1. Resistor values are in ohm, k=1000 ohm, M=1000000 ohm.
2. All resistors are 1/8 watt, 5% except where otherwise indicated.
3. ⊥ ⏚ ⏚ Represents PCB common ground.

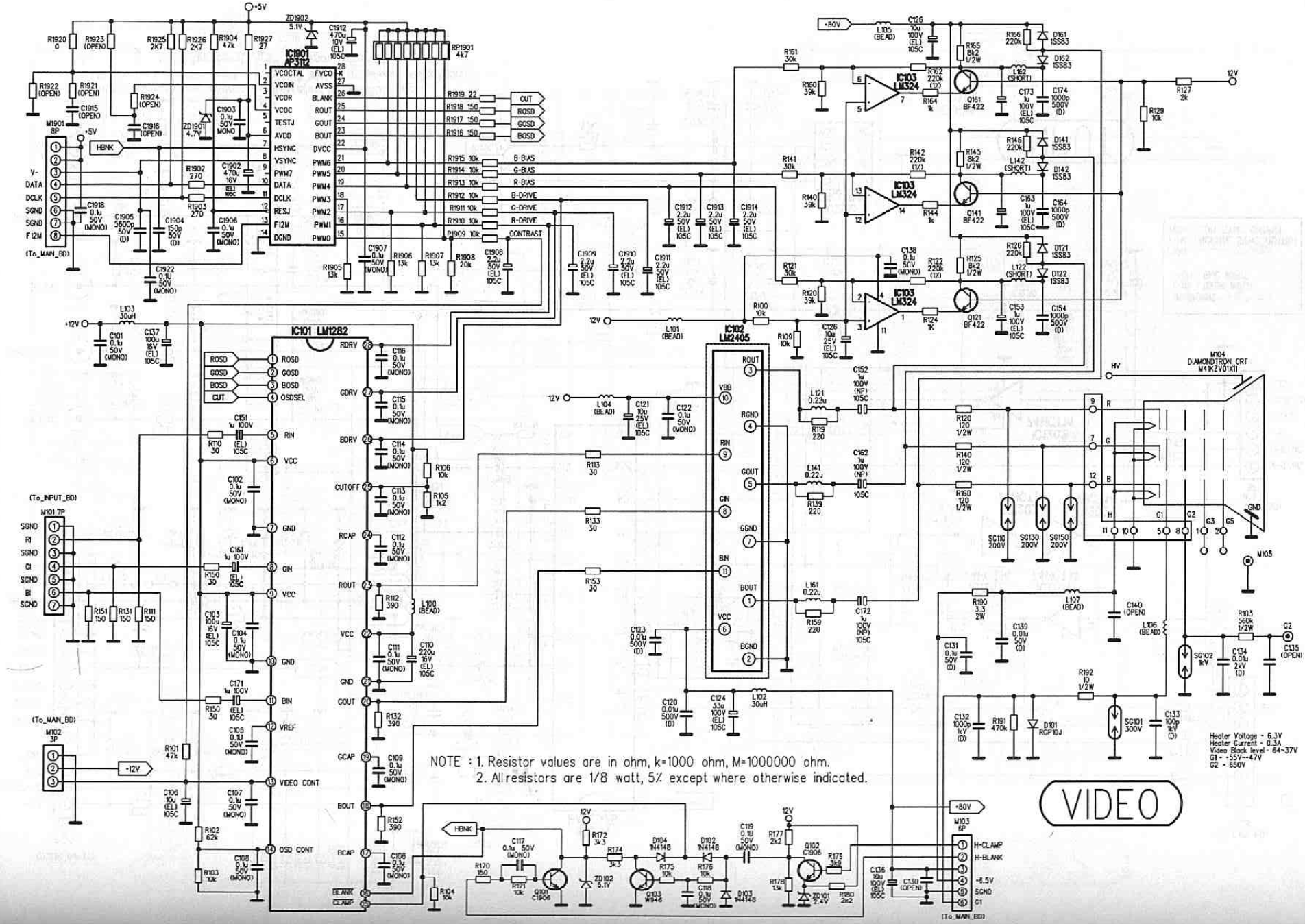
IC1901 AP3112
IC101 LM1282
IC102 LM2405
IC103 LM324
M104 DIAMONDTRON_CRT M41KZV01XTI
M101 7P
M102 3P
M103 6P
M105
(To_MAIN_BD)
(To_INPUT_BD)
HBNK
VIDEO
NOTE : 1. Resistor values are in ohm, k=1000 ohm, M=1000000 ohm.
2. All resistors are 1/8 watt, 5% except where otherwise indicated.
Heater Voltage - 6.3V
Heater Current - 0.3A
Video Black level - 64-37V
G1 - -55V--47V
G2 - 650V

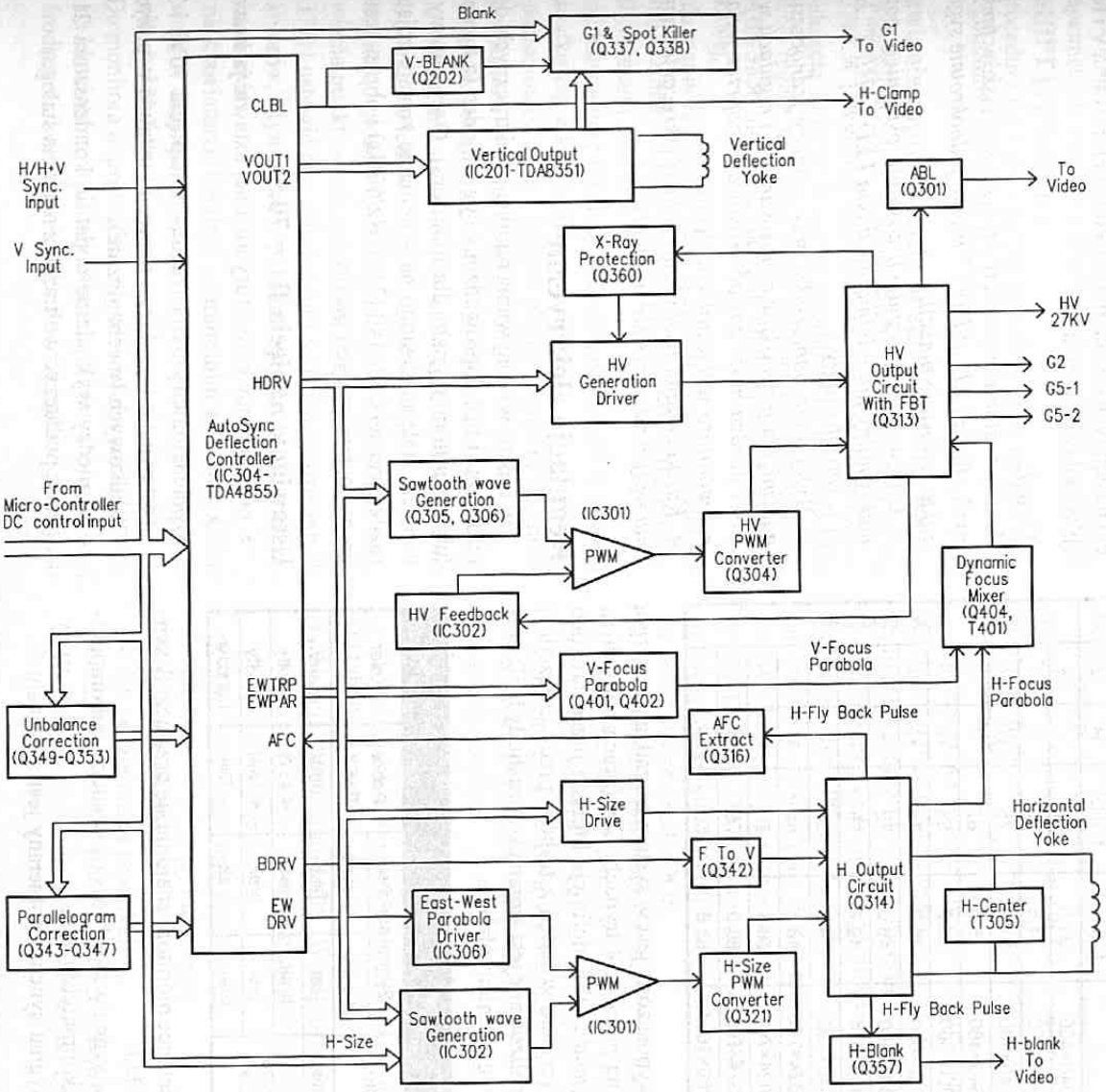

FI
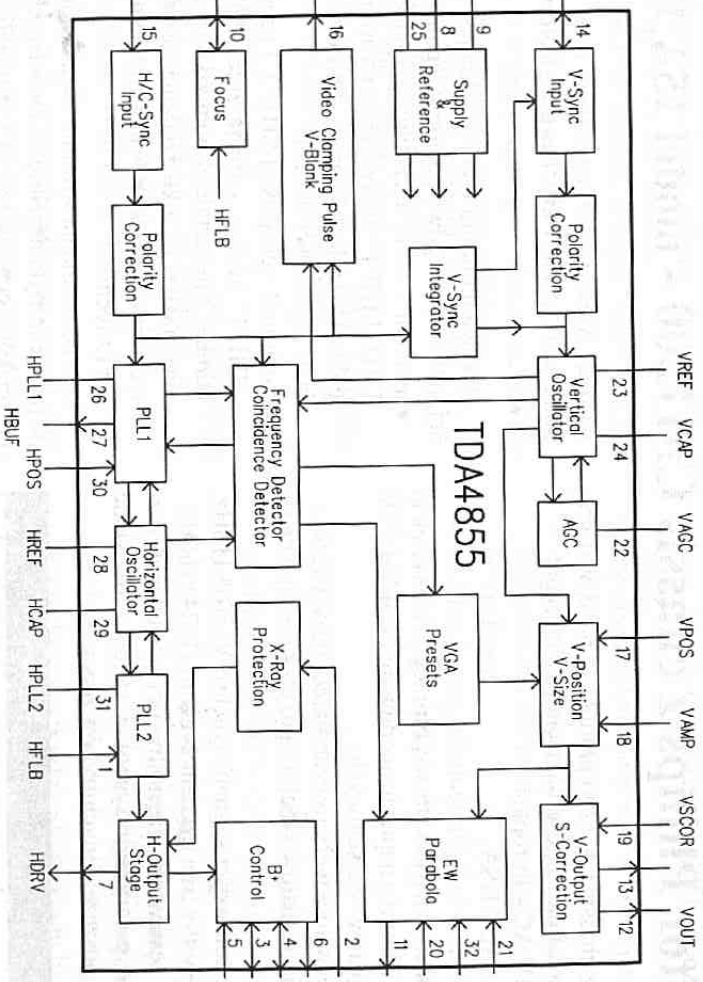
Function block of deflection output circuit